620 STD

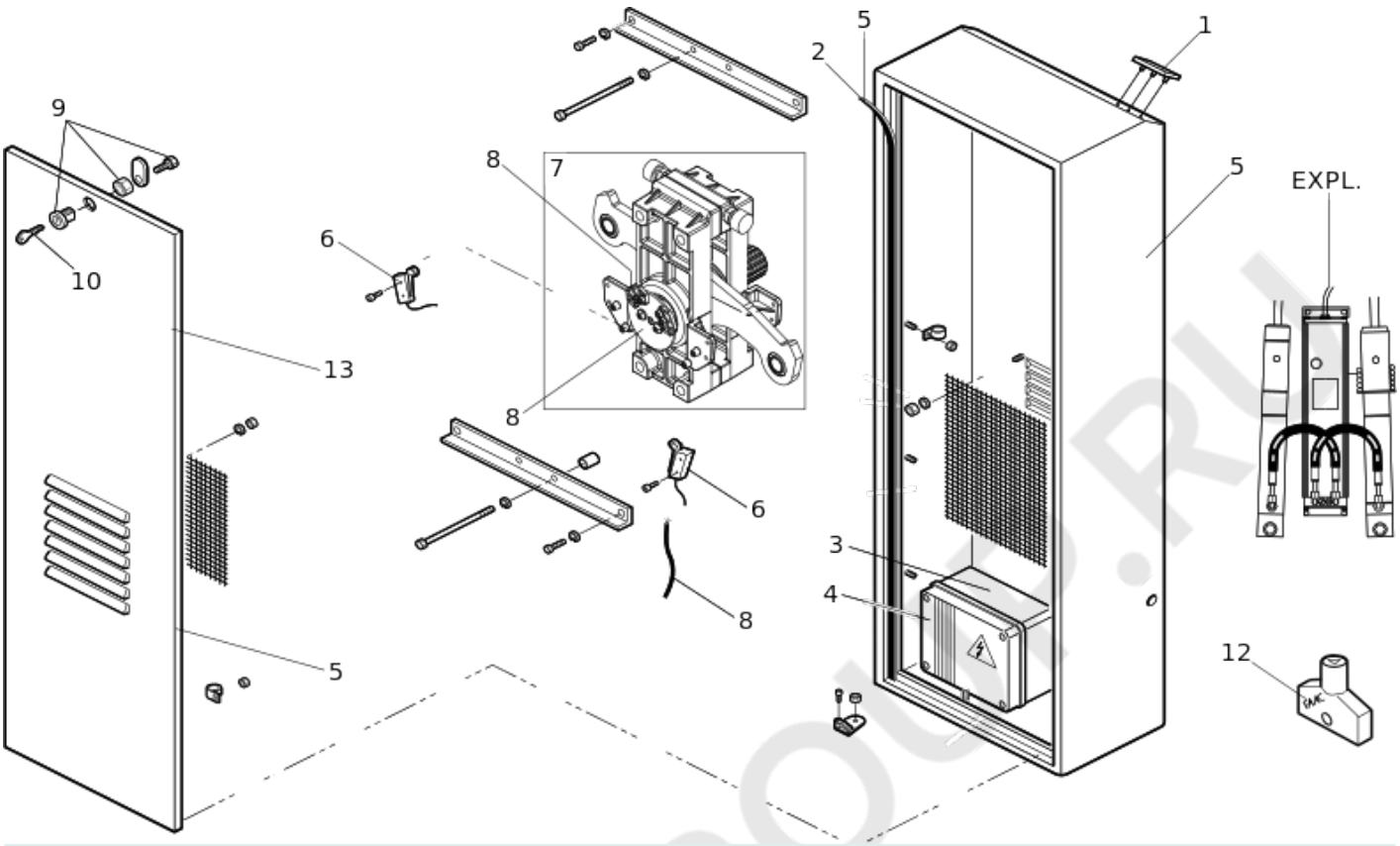

Pos.	Code	EAN	Quantity	Replacement code	Description	Salable
1	7324745	8055195025187	1		2003 FAAC LOGO	yes
2	7094025	8055195022650	1		AERSTOP GASKET 10X3	yes
3	419401	8055195008708	1		620/640 ELECTRONIC UNIT BOX	yes
4	2022715	8055195014815	1		1-624BLD CONTROL UNIT	yes
5	63000627	8055195056730	1		620 Upright and door (RAL2004)	yes
6	7580145	8055195025835	2		MICROSWITCH OMRON D2VW-O1L2-1MS	yes
7	63000518	8055195030891	1		620 BARRIER NEW LEVEL GROUP	yes
8	63003314	8055195057638	1		620/640 LIMIT SWITCHES CAMS AND CABLE	yes

FAAC-GROUP.RU

Pos.	Code	EAN	Quantity	Replacement code	Description	Salable
9	63003315	8055195057645	1		620/640 KEYLOCK GROUP	yes
10	7131005	8055195023213	1		KEY MOD. 3889.0913	yes
12	713002	8055195010886	1		402 RELEASE KEY	yes
13	7270645	8055195024593	1		620 R.1 HOUSING COVER	yes

FAAC-GROUP.RU

620STD 2

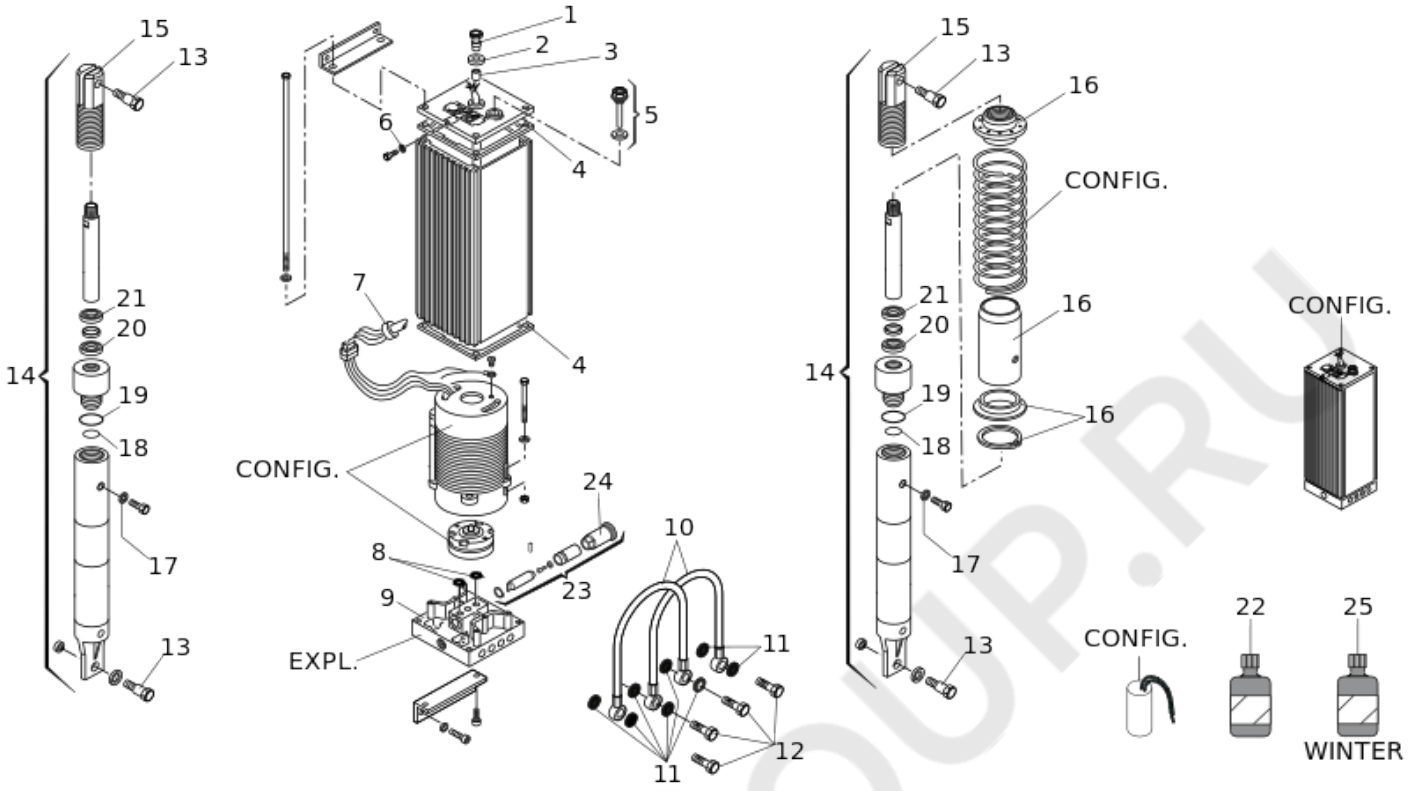

Pos.	Code	EAN	Quantity	Replacement code	Description	Salable
1	7109095	8055195022957	1		CABLE GLAND	yes
2	7043355	8055195022131	1		CABLE GLAND RING	yes
3	7099245	8055195022841	1		STRAIN RELIEF GASKET	yes
4	7099315	8055195022858	2		G.D.O. 590 FLAT GASKET	yes
5	7112065	8055195023084	1		OIL LEVEL PLUG WITH LEVEL INDIC. 620/640	yes
6	7094065	8055195022667	1		COPPER WASHER 7X4X1	yes
7	7514075	8055195025743	1		CABLE M.1.8 W/O MOTOR THERMAL PROT.	yes
8	7090010015	8055195040074	2		GASKET OR 4.48X1.78 (2018)	yes
9	4997645	8055195015966	1		C.T.B.DISTRIBUTION FLANGE UNIT	yes
10	63000112	8055195028966	2		FLEXIBLE PIPE GROUP OCC/OCC	yes

FAAC-GROUP.RU

Pos.	Code	EAN	Quantity	Replacement code	Description	Salable
11	63003231	8055195043648	8		BONDED SEAL 1/8 GAS CENT. 89096 DICKTOMA	yes
12	7110115	8055195023022	4		SW.G.RAM 750 CAP 1-8 KEY 13 H29,5	yes
13	7182155	8055195023534	4		C.T.B.620-640 BAR PIN W/JOINT	yes
14	63003417	8055195062076	2		620 PLUNGER WITH THREADED FORK	yes
15	7221005	8055195024111	2		SPRING ADJUSTMENT FORK W/JOINT	yes
16	63003318	8055195057676	1		620/640 SPRING SUPPORT AND NUT GROUP	yes
17	7094145	8055195022704	2		400/003/4490 BONDED SEAL	yes
18	7090350025	8055195040241	2		GASKET OR 34.60X2.62 (3137)	yes
19	7090360025	8055195040258	2		GASKET OR 40.95X2.62 (3162)	yes
20	7095095	8055195022797	2		EU 2028/S SEAL	yes
21	7095015	8055195022742	2		SCRAPER RING	yes
22	714017	8055195010923	3		FAAC HP OIL LT.1	yes
23	424593	8055195008791	1		C.T.B.EXTERNAL RELEASE TRINAGULAR KEY	yes
24	7128035	8055195023190	1		CYLINDER LOCK	yes
25	714042	8055195063998	1		FAAC HP2 OIL - 160Kg/188	yes

FAAC-GROUP.RU

620 STD CONFIGURATOR

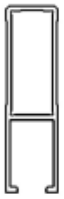

1 RETTANGOLARE / RECTANGULAR
2 RETTANGOLARE CON SIEPE / RECTANGULAR WITH SKIRT
3 RETTANGOLARE ARTICOLATA / ARTICULATED RECTANGULAR

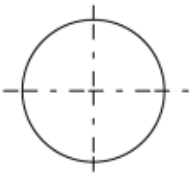

4 TONDA / ROUND
5 TONDA PIVOTANTE / PIVOTING ROUND

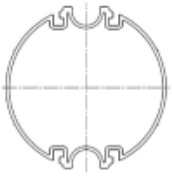

6 TONDA S / S ROUND
7 TONDA S CON SIEPE / S ROUND WITH SKIRT

Pos.	Code	EAN	Quantity	Replacement code	Description	Salable

FAAC-GROUP

ARTICULATED RECTANGULAR BEAM

ASTA RETTANGOLARE ARTICOLATA
ARTICULATED RECTANGULAR BEAM

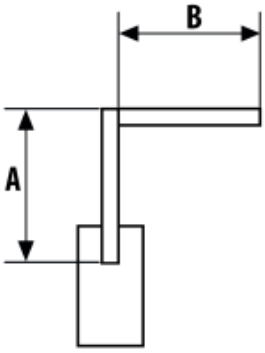

A	L = A+B					
0.815 ÷ 1.314 m	1.825 ÷ 2.815 m	1 ø 6	4 0.75 l/min unit	5 0.75 l/min	6 1400 RPM	7 8 uF
	2.825 ÷ 3.815 m	2 ø 6.5				
1.315 ÷ 1.814 m	1.825 ÷ 2.815 m					
	2.825 ÷ 3.815 m	3 ø 7.2				
1.815 ÷ 2.075 m	1.825 ÷ 2.815 m					

Pos.	Code	EAN	Quantity	Replacement code	Description	Salable
1	7210705	8055195023886	1		620 SPRING	yes
2	7210715	8055195023893	1		620 SPRING	yes
3	7210885	8055195024005	1		620 3,3 m SPRING	yes
4	2077145	8055195014884	1		620-640 CENTRAL CBAC 0.75 LT NO SENSOR	yes
5	3204435	8055195015027	1		PUMP LT. 0,75 C/INTEGRATED DISTAN.	yes
6	7700055	8055195025972	1		MOTOR 220V 4P. SINGLE PHASE WITH THERMAL	yes
7	7601355	8055195025958	1		CAPACITOR 400V UL RECOG.CAVI CONN.	yes

FAAC-GR

RECTANGULAR BEAM WITH SKIRT

ASTA RETTANGOLARE CON SIEPE
RECTANGULAR BEAM WITH SKIRT

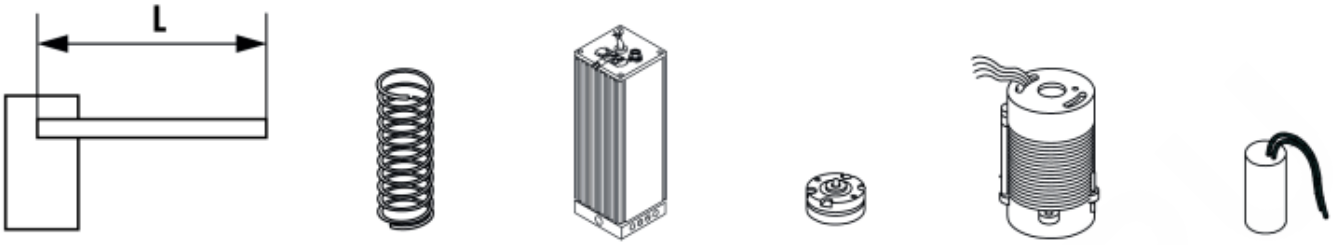

1.815 ÷ 2.805 m	1 ø 5.5	5 1 l/min unit	7 1 l/min	9 1400 RPM	10 8 uF
2.815 ÷ 3.555 m	2 ø 6.5	6 0.75 l/min unit	8 0.75 l/min		
3.565 ÷ 3.815 m	3 ø 7				
3.825 ÷ 4.815 m	4 ø 8				

Pos.	Code	EAN	Quantity	Replacement code	Description	Salable
1	7210695	8055195023879	1		620 SPRING L.400 F5,5 K.0,238	yes
2	7210715	8055195023893	1		620 SPRING	yes
3	7210735	8055195023909	1		SPRING 620-640 L.400 F.7 K.0,80	yes
4	7210745	8055195023916	1		SPRING 640 L. 400 F.8,00	yes
5	2077155	8055195014891	1		620-640 CENTRAL CBAC 1 LT WITHOUT SENSOR	yes
6	2077145	8055195014884	1		620-640 CENTRAL CBAC 0.75 LT NO SENSOR	yes
7	3204425	8055195015010	1		CAST-IRON PUMP LT.1 WITH INTEGRATED DIST	yes
8	3204435	8055195015027	1		PUMP LT. 0,75 C/INTEGRATED DISTAN.	yes
9	7700055	8055195025972	1		MOTOR 220V 4P. SINGLE PHASE WITH THERMAL	yes

FAAC-GRO

Pos.	Code	EAN	Quantity	Replacement code	Description	Salable
10	7601355	8055195025958	1		CAPACITOR 400V UL RECOG.CAVI CONN.	yes

FAAC-GROUP.RU

RECTANGULAR BEAM

ASTA RETTANGOLARE SENZA ACCESSORI
RECTANGULAR BEAM WITHOUT ACCESSORIES

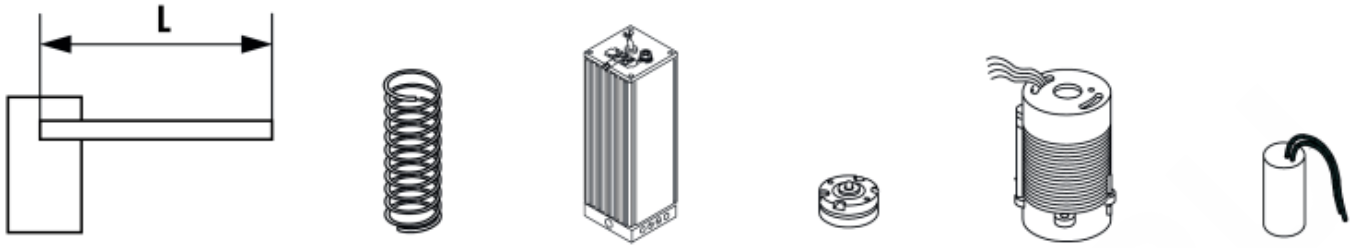

1.315 ÷ 2.055 m	1 ø 4.5	6 1 l/min unit	8 1 l/min	10 1400 RPM	11 8 uF
2.065 ÷ 2.555 m	2 ø 5.5				
2.565 ÷ 3.055 m	3 ø 6	7 0.75 l/min unit	9 0.75 l/min		
3.065 ÷ 3.815 m	4 ø 7.2				
3.825 ÷ 4.815 m	5 ø 7				

Pos.	Code	EAN	Quantity	Replacement code	Description	Salable
1	7210855	8055195023985	1		620 SPRING L.400 F.4,50 K.0,135	yes
2	7210695	8055195023879	1		620 SPRING L.400 F5,5 K.0,238	yes
3	7210705	8055195023886	1		620 SPRING	yes
4	7210885	8055195024005	1		620 3,3 m SPRING	yes
5	7210735	8055195023909	1		SPRING 620-640 L.400 F.7 K.0,80	yes
6	2077155	8055195014891	1		620-640 CENTRAL CBAC 1 LT WITHOUT SENSOR	yes
7	2077145	8055195014884	1		620-640 CENTRAL CBAC 0.75 LT NO SENSOR	yes
8	3204425	8055195015010	1		CAST-IRON PUMP LT.1 WITH INTEGRATED DIST	yes
9	3204435	8055195015027	1		PUMP LT. 0,75 C/INTEGRATED DISTAN.	yes

FAAC-GRO

Pos.	Code	EAN	Quantity	Replacement code	Description	Salable
10	7700055	8055195025972	1		MOTOR 220V 4P. SINGLE PHASE WITH THERMAL	yes
11	7601355	8055195025958	1		CAPACITOR 400V UL RECOG.CAVI CONN.	yes

FAAC-GROUP.RU

PIVOTING ROUND BEAM

ASTA TONDA PIVOTTANTE
PIVOTING ROUND BEAM

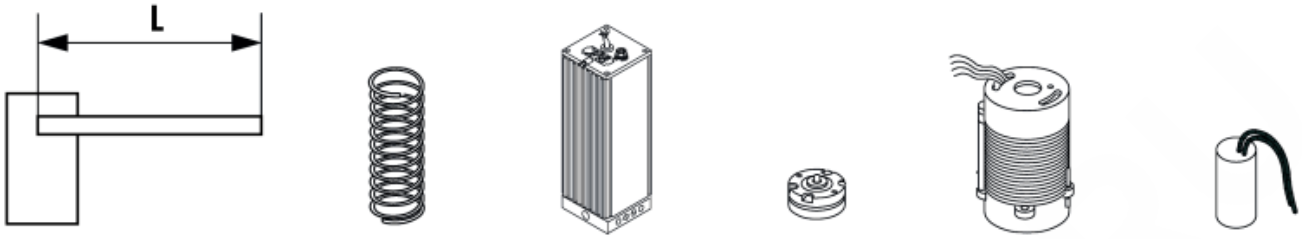

1.500 ÷ 2.240 m	1 ø 4.5	4 1 l/min unit	6 1 l/min	8 1400 RPM	9 8 uF
2.250 ÷ 2.740 m	2 ø 5.5				
2.750 ÷ 3.000 m	3 ø 6	5 0.75 l/min unit	7 0.75 l/min		

Pos.	Code	EAN	Quantity	Replacement code	Description	Salable
1	7210855	8055195023985	1		620 SPRING L.400 F.4,50 K.0,135	yes
2	7210695	8055195023879	1		620 SPRING L.400 F5,5 K.0,238	yes
3	7210705	8055195023886	1		620 SPRING	yes
4	2077155	8055195014891	1		620-640 CENTRAL CBAC 1 LT WITHOUT SENSOR	yes
5	2077145	8055195014884	1		620-640 CENTRAL CBAC 0.75 LT NO SENSOR	yes
6	3204425	8055195015010	1		CAST-IRON PUMP LT.1 WITH INTEGRATED DIST	yes
7	3204435	8055195015027	1		PUMP LT. 0,75 C/INTEGRATED DISTAN.	yes
8	7700055	8055195025972	1		MOTOR 220V 4P. SINGLE PHASE WITH THERMAL	yes
9	7601355	8055195025958	1		CAPACITOR 400V UL RECOG.CAVI CONN.	yes

FAAC-GRO

S ROUND BEAM WITH SKIRT

ASTA TONDA S CON SIEPE
S ROUND BEAM WITH SKIRT

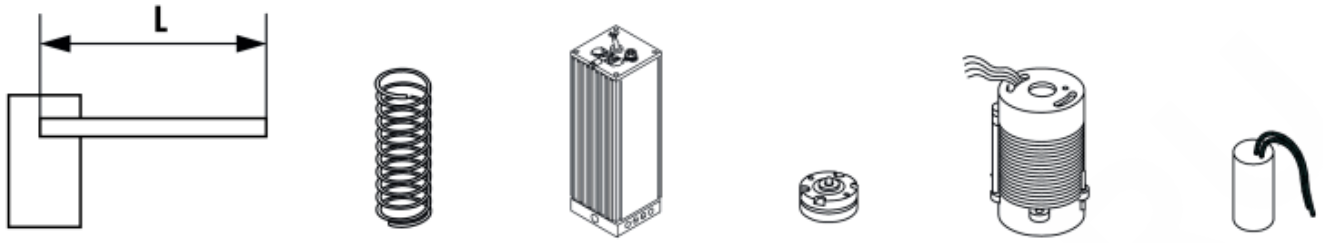

0 ÷ 2.300 m	1 ø 4.5	6 1 l/min unit	8 1 l/min	10 1400 RPM	11 8 uF
2.310 ÷ 2.800 m	2 ø 5.5				
2.810 ÷ 3.300 m	3 ø 6.5	7 0.75 l/min unit	9 0.75 l/min		
3.310 ÷ 3.800 m	4 ø 7				
3.810 ÷ 4.300 m	5 ø 8				
4.310 ÷ 5.000 m					

Pos.	Code	EAN	Quantity	Replacement code	Description	Salable
1	7210855	8055195023985	1		620 SPRING L.400 F.4,50 K.0,135	yes
2	7210695	8055195023879	1		620 SPRING L.400 F5,5 K.0,238	yes
3	7210715	8055195023893	1		620 SPRING	yes
4	7210735	8055195023909	1		SPRING 620-640 L.400 F.7 K.0,80	yes
5	7210745	8055195023916	1		SPRING 640 L. 400 F.8,00	yes
6	2077155	8055195014891	1		620-640 CENTRAL CBAC 1 LT WITHOUT SENSOR	yes
7	2077145	8055195014884	1		620-640 CENTRAL CBAC 0.75 LT NO SENSOR	yes
8	3204425	8055195015010	1		CAST-IRON PUMP LT.1 WITH INTEGRATED DIST	yes

FAAC-GH

Pos.	Code	EAN	Quantity	Replacement code	Description	Salable
9	3204435	8055195015027	1		PUMP LT. 0,75 C/INTEGRATED DISTAN.	yes
10	7700055	8055195025972	1		MOTOR 220V 4P. SINGLE PHASE WITH THERMAL	yes
11	7601355	8055195025958	1		CAPACITOR 400V UL RECOG.CAVI CONN.	yes

FAAC-GROUP.RU

S ROUND BEAM

ASTA TONDA S SENZA ACCESSORI
S ROUND BEAM WITHOUT ACCESSORIES

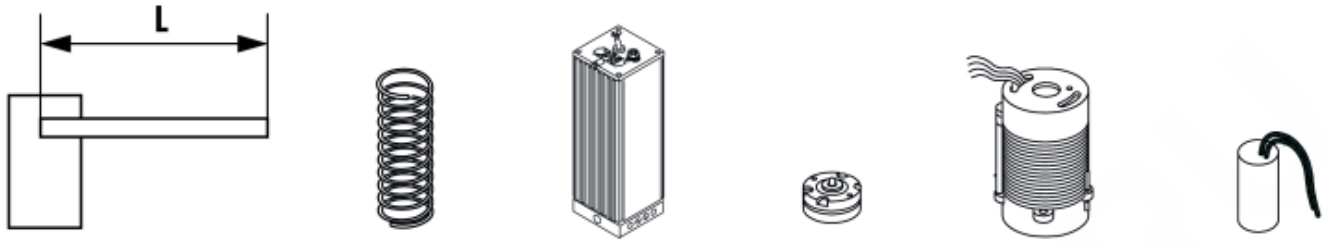

0 ÷ 2.300 m	1 ø 4.5	6 1 l/min unit	8 1 l/min	10 1400 RPM	11 8 uF
2.310 ÷ 2.800 m	2 ø 5.5				
2.810 ÷ 3.300 m	3 ø 6	7 0.75 l/min unit	9 0.75 l/min		
3.310 ÷ 3.800 m	4 ø 7.2				
3.810 ÷ 4.300 m	5 ø 7				
4.310 ÷ 5.000 m					

Pos.	Code	EAN	Quantity	Replacement code	Description	Salable
1	7210855	8055195023985	1		620 SPRING L.400 F.4,50 K.0,135	yes
2	7210695	8055195023879	1		620 SPRING L.400 F5,5 K.0,238	yes
3	7210705	8055195023886	1		620 SPRING	yes
4	7210885	8055195024005	1		620 3,3 m SPRING	yes
5	7210735	8055195023909	1		SPRING 620-640 L.400 F.7 K.0,80	yes
6	2077155	8055195014891	1		620-640 CENTRAL CBAC 1 LT WITHOUT SENSOR	yes
7	2077145	8055195014884	1		620-640 CENTRAL CBAC 0.75 LT NO SENSOR	yes
8	3204425	8055195015010	1		CAST-IRON PUMP LT.1 WITH INTEGRATED DIST	yes
9	3204435	8055195015027	1		PUMP LT. 0,75 C/INTEGRATED DISTAN.	yes

FAAC-GH

Pos.	Code	EAN	Quantity	Replacement code	Description	Salable
10	7700055	8055195025972	1		MOTOR 220V 4P. SINGLE PHASE WITH THERMAL	yes
11	7601355	8055195025958	1		CAPACITOR 400V UL RECOG.CAVI CONN.	yes

FAAC-GROUP.RU

ROUND BEAM

ASTA TONDA SENZA ACCESSORI
ROUND BEAM WITHOUT ACCESSORIES

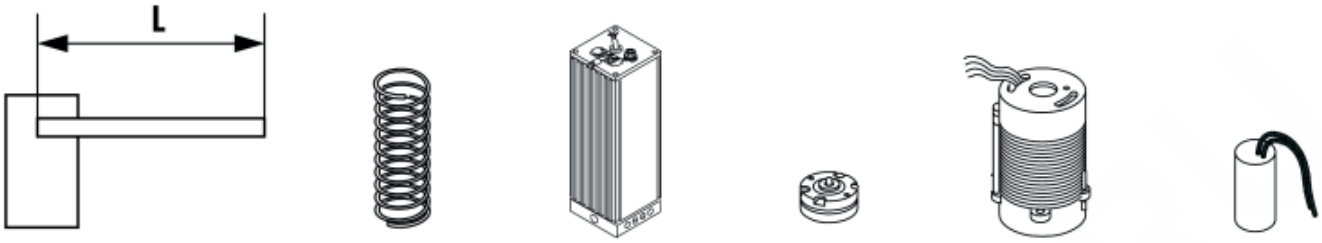

1.500 ÷ 2.740 m	1 ø 4.5	5 1 l/min unit	7 1 l/min	9 1400 RPM	10 8 uF
2.750 ÷ 3.240 m	2 ø 5.5				
3.250 ÷ 4.000 m	3 ø 6	6 0.75 l/min unit	8 0.75 l/min		
4.010 ÷ 5.000 m	4 ø 7				

Pos.	Code	EAN	Quantity	Replacement code	Description	Salable
1	7210855	8055195023985	1		620 SPRING L.400 F.4,50 K.0,135	yes
2	7210695	8055195023879	1		620 SPRING L.400 F5,5 K.0,238	yes
3	7210705	8055195023886	1		620 SPRING	yes
4	7210735	8055195023909	1		SPRING 620-640 L.400 F.7 K.0,80	yes
5	2077155	8055195014891	1		620-640 CENTRAL CBAC 1 LT WITHOUT SENSOR	yes
6	2077145	8055195014884	1		620-640 CENTRAL CBAC 0.75 LT NO SENSOR	yes
7	3204425	8055195015010	1		CAST-IRON PUMP LT.1 WITH INTEGRATED DIST	yes
8	3204435	8055195015027	1		PUMP LT. 0,75 C/INTEGRATED DISTAN.	yes
9	7700055	8055195025972	1		MOTOR 220V 4P. SINGLE PHASE WITH THERMAL	yes

FAAC-GRO

Pos.	Code	EAN	Quantity	Replacement code	Description	Salable
10	7601355	8055195025958	1		CAPACITOR 400V UL RECOG.CAVI CONN.	yes

FAAC-GROUP.RU

FLANGIA DI DISTRIBUZIONE 620

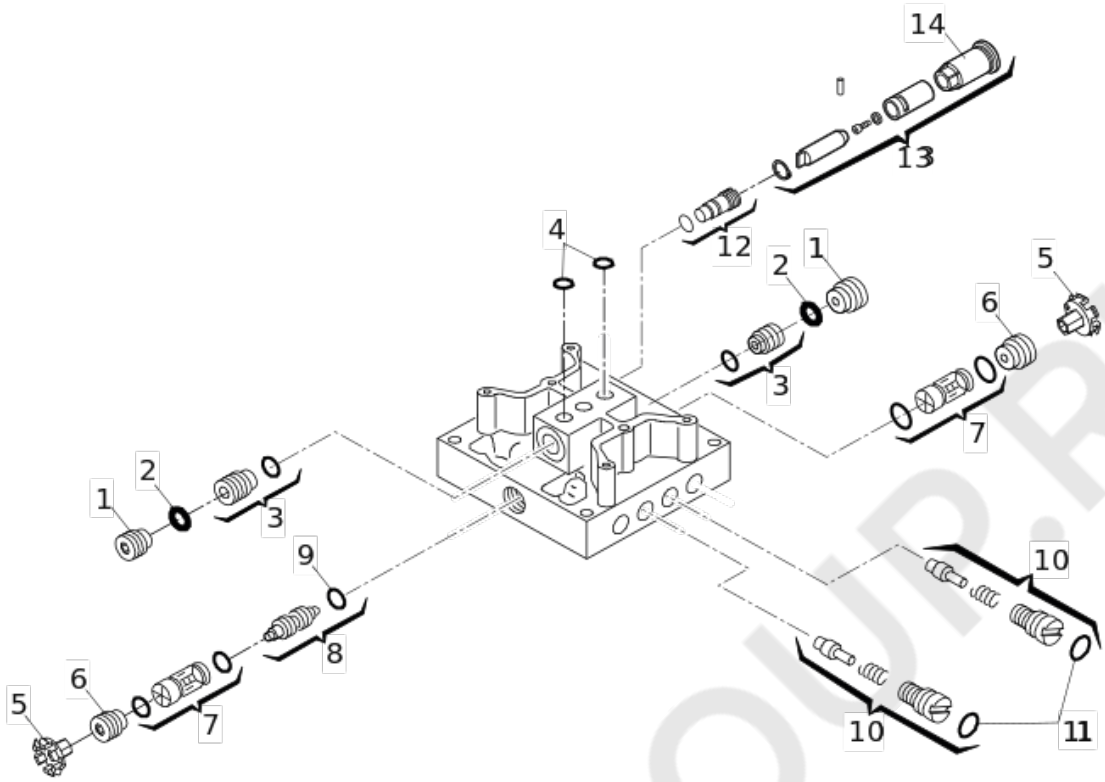

Pos.	Code	EAN	Quantity	Replacement code	Description	Salable
1	7049135	8055195022186	2		VALOX VALVE RETAINING RING NUT	yes
2	63000577	8055195031225	2		SPRING 14X7,2X0,35 DIN2093 SPARE PARTS	yes
3	4404065	8055195015713	2		SUCTION VALVE WITH SPRING	yes
4	7090010015	8055195040074	2		GASKET OR 4.48X1.78 (2018)	yes
5	63000007	8055195028614	2		ANTI UNSCREWING BLOCK VALVE	yes
6	7049005	8055195022148	2		BRASS VALVE RETAING RING NUT	yes
7	4404085	8055195015737	2		STOP VALVE IN ZAMACK	yes
8	4180285	8055195015454	1		CHANGE OVER PISTON WITH OR	yes

FAAC-GROUP.RU

Pos.	Code	EAN	Quantity	Replacement code	Description	Salable
9	7090300015	8055195040234	1		GASKET OR 7.66X1.78 90 SHORE	yes
10	4180395	8055195015508	2		BY PASS BRASS CAP	yes
11	7090150015	8055195040135	2		GASKET OR 9.25X1.78 (2037)	yes
12	4180305	8055195015478	1		620-640 EXT.RELEASE PLUG	yes
13	424594	8055195008807	1		C.T.B.EXTERNAL RELEASE TRIANGULAR KEY	yes
13	424593	8055195008791	1		C.T.B.EXTERNAL RELEASE TRINAGULAR KEY	yes
14	7128035	8055195023190	1		CYLINDER LOCK	yes

FAAC-GROUP.RU